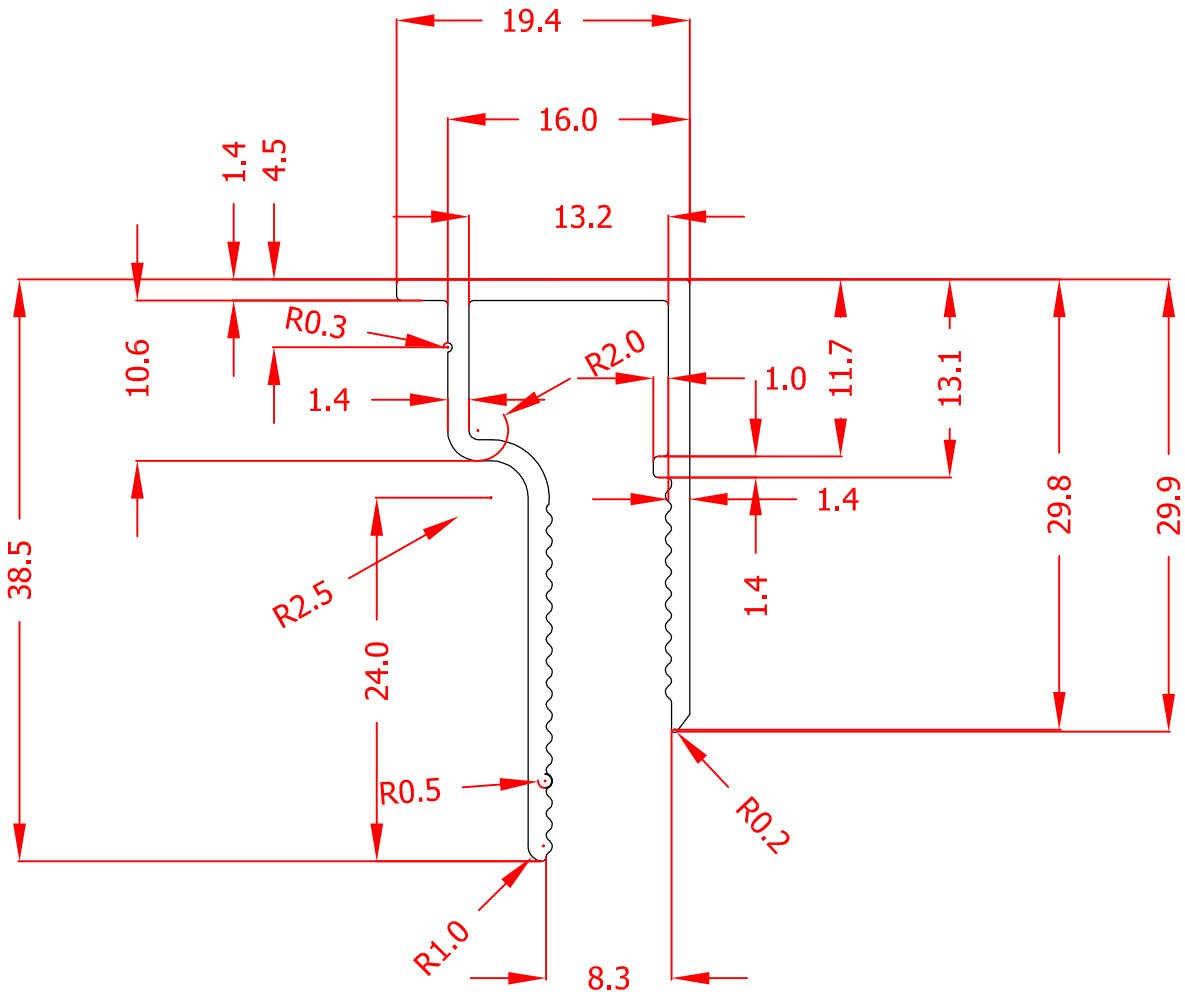


( 2 : 1 )

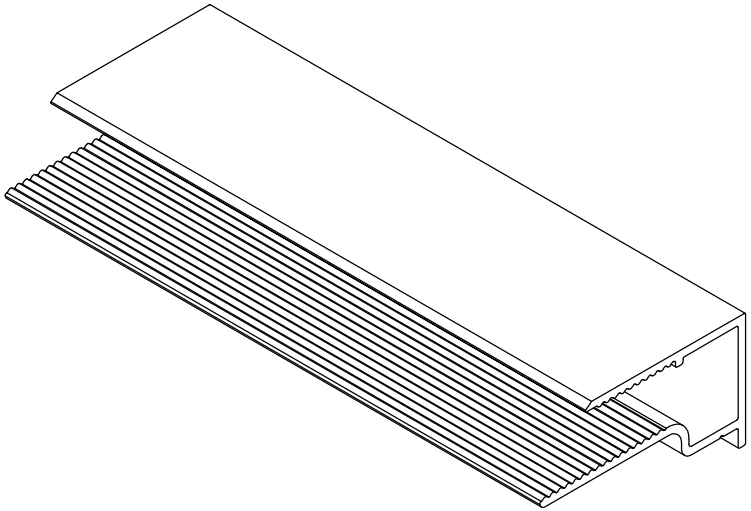


**Technical Support Department**
**Palram Industries Ltd.**
Ramat Yohanan 30035, Israel
Tel: 972-4-8459900 Fax: 972-4-8444012
E-Mail: Palram@palram.com
Website: www.palram.com


| Date | Revision | App. by |
|---|---|---|
| 11/6/2008 | A | TF |

| Project: | Drawing Name: | Scale: |
|---|---|---|
| SUNPAL | AL Sealing strip 8mm | 2:1 |
| **Part Number:** | **Drawn by:** | **Material:** |
| 0608 | Haim_k | Aluminum-6063 T5 |